FEATURES

- ◆Lens Brand：ZLKC
- ◆1/1.8″C-Mount 4mm F2.0 5MP
- ◆Can suppress stray light
- ◆High resolution, low distortion
- ◆Small volume & Lightweight

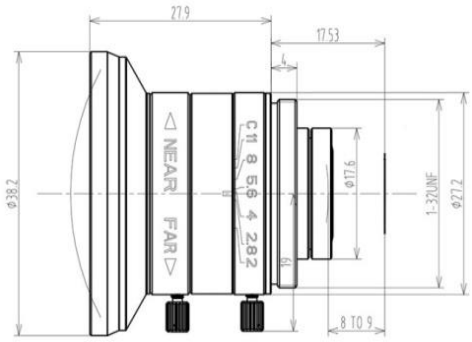

SPECIFICATION

5MP 4mm Manual Iris Lens C Mount			Working Distance	Optical Magnification	1/1.8"Field of View(mm)	
Model		**VM0420MP5**	mm	-	H	V
Image Size		1/1.8-inch	900	0.005X	1574	1181
Focal length		**4mm**	850	0.005X	1489	1116
F No.		F2.0-C	800	0.005X	1403	1052
M.O.D(m)		0.1-Inf.	750	0.005X	1317	988
Operation	Iris	Manual	700	0.006X	1233	942
	Focus	Manual	650	0.006X	1147	860
Horizontal Angle of View (D×H×V)	1/1.8"	94°×82.9°×66.5°	600	0.007X	1060	796
	1/2.5"	82.9°×70.7°×56.7°	550	0.007X	974	731
	1/3"	78.2°×61.1°×47.5°	500	0.008X	889	667
Distortion	<0.5%		450	0.009X	803	602
BFL	8.7mm		400	0.010X	717	538
Mount	C-Mount		350	0.011X	631	473
Object Dimension	459mm×344mm (WD=250mm)		300	0.013X	544	409
Dimension	Φ38.2×27.9mm		250	0.016X	459	344
Weight	62.3g		200	0.020X	374	281
Filter Thread	-		150	0.026X	288	216
Working Temperature	-20ºC ～ +60ºC		100	0.037X	202	151